| ITEM | DESCRIPTION | PART No. | QTY. |
|---|---|---|---|
| 1. | CHASSEY PLATE | PUB0-10771 | 1 |
| 2. | M6 x125.0 HEX. HEAD BOLT | | 1 |
| 3. | M6 NYLOC NUT | | 1 |
| 4. | POST PULLEY | T6B0-0497 | 2 |
| 5. | COMPRESSION SPRING: 31.8 O.D x ø3.25 WIRE x127.0 FREE LENGTH x56.9 SOLID LENGTH x17 COIL x3.2 N/mm RATE x22.24KG MAX. S.W.L. | | 2 |
| 6. | ø34.0 x3.0 WALL R.H.S. x 20.0 LONG | | 4 |
| 7. | HALL STAGE PRODUCT LABEL | LBL0-8379 | 1 |
| 8. | ø11.0 x 2.5 WALL R.H.S. x 110.0 LONG | | 2 |
| 9. | T60 RETURN PULLEY | T6HA-1187 | 4 |
| 10. | M5 x 16 CSK SCREW | | 16 |
| 11. | M5 NYLOC NUT | | 16 |
| 12. | NYLON SPRING GUIDE | MGR0-8623 | 8 |

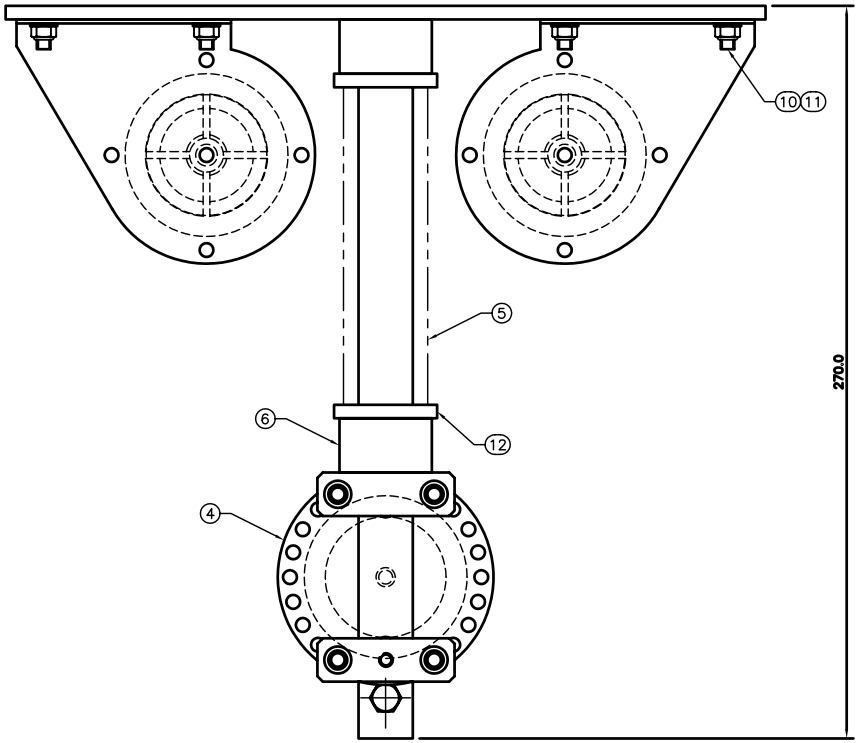


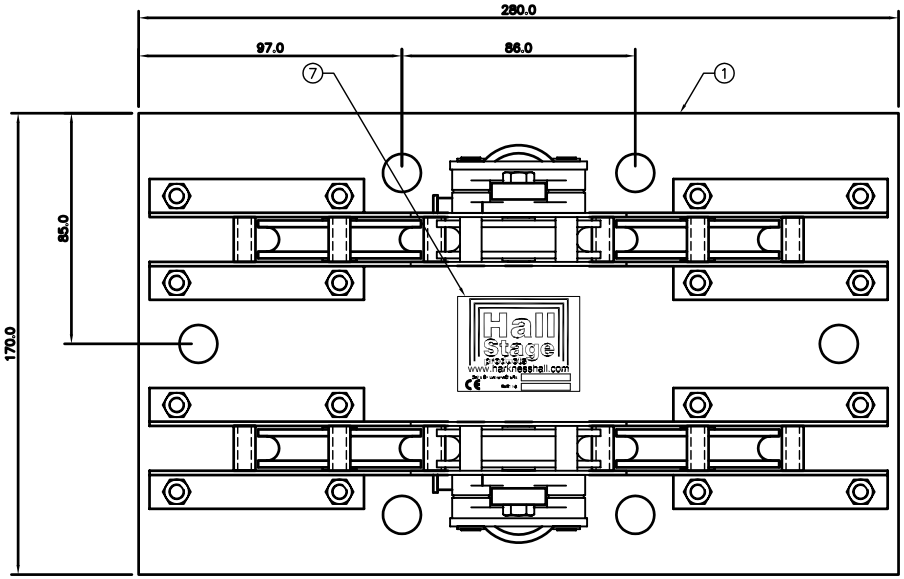


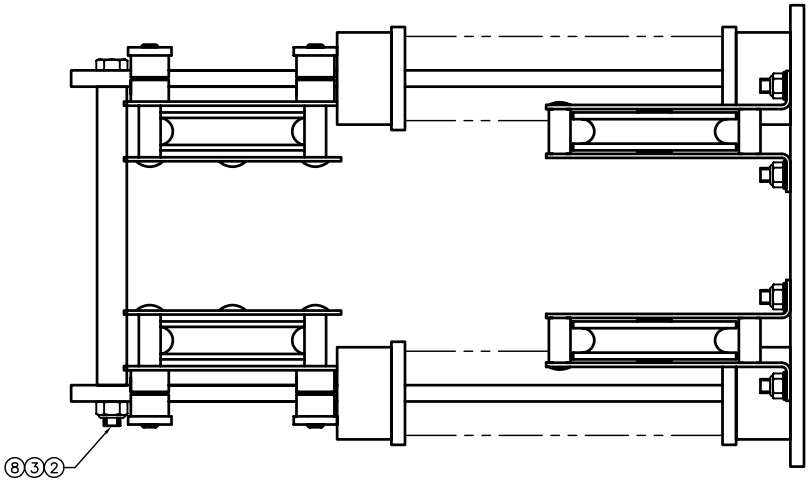


| | | | |
|---|---|---|---|
| A | MAT'L-SEE PART LIST | A1 SCALE 1:1 | DRN DG |
| MOD | ISSUE | SPEC: | DATE 22.10.02 |
| | | | CHD |
| | | | APPD |

TITLE ASSEMBLY: T60 UNIVERSAL SPRUNG WALL FIXING HEAD PULLEY

DRG NO T6HD-8624 ISSUE: A